NEFTCA-X 型旗形端子压接模具

NEFTCA-X FLAG TERMINAL CRIMPING APPLICATOR

产品介绍 Introduction

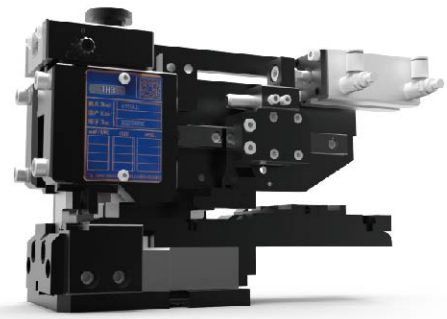

NEFTCA-X压接模具为旗型模具的升级版，模具可同时兼容方盘和圆盘挂头，采用模块化设计，实现压接和托料分体脱离，提高压接质量。该模具具有调节方便、送料稳定等优势，能广泛应用于线束加工领域。

As the upgrade version of the flag-terminal applicator, NEFTCA-X freely switch between disk dial and wedge dial. The modular design makes the crimping applicator unit and feeding unit separate, which provides high quality.Easy adjustment and stable feeding make this crimping applicator applicator widely used in wire harness industry.

特性 Feature

- 调节系统：盘式和楔块式两种结构可以自由切换，C.H./H.调整精度0.02mm，调节范围2mm；调节节奏感强，刻度易识别；
- 送料机构：定制化设计，送料稳定；
- 快换机构：完美匹配komax、AMP、Mecal、THB等品牌半自动和全自动压线机；
- 技术文件：提供完整的使用、保养说明书，如有要求，也可提供机器能力研究、断面分析报告等文件；
- 超强抗锈：QW表面处理；
- 产品追溯：每个零件都拥有自己的ID；
- 云端数据：扫描二维码，实时查看出厂资料信息。

- Adjustment : Freely switch between disk dial and wedge dial; The adjustment accuracy of C.H./I.H is 0.02mm and the adjustment range is up to 2mm. strong sense of rhythm and legible scale.
- Feeding mechanism: The holder is designed according to the shape of the terminal, which provide a stable feed.
- Quick change: Perfectly fit withkomax, AMP, Mecal and THB press and fully automatic crimping applicator amchine.
- Technical documentation：you can get a complete technical documentation containing all the information needed to safely use and correctly maintain the equipment. Upon re quest, a capability study& Cross-section Analysis can be provided.
- Strong resistance to rust: QW surface plating.
- Production tracking: Laser labeling for each part-unique ID.
- Cloud data：Scan QR code on each name plate to get the data of the applicator in real time.

技术参数 Specifications

型　号	Type	NEFTCA-X
行　程	Stroke	40mm
端子料厚	Terminal thickness	0.8mm（Max）
料带形式	Terminal type	纵向 End Feed
闭合高度	Shut height	135.78mm（5.3463in）
适应线径	Wire size	0.08~6 mm^2（9~28AWG）
送料机构	Feed mechanism	气动Pneumatic
送料步距	Feeding step	40mm（1.575in）（Max）
重　量	Weight	5Kg
外形尺寸	Dimensions(mm)	L200×W100×H170